Collaborative Robots

COBOTTA

DENSO

Anywhere, anytime, hassle-free.
A robot that collaborates with everyone.



optional products





Electric gripper*1

This hand-mounted tool is suitable for basic operations such as “grip” and “release.”



Electric vacuum generator*1

This tool achieves adsorption easily without any external compressor.



Base plate (Upper and lower)

The base plate is used to set up and operate a COBOTTA robot without securing it in place. This 2-part base plate consists of upper and lower sections.



Camera built-in set*1·*2

This enables the worker to perform work while visually confirming the workpiece position. Since the product is calibrated at the factory before shipping, the product can be used immediately without initial setting.



Field network interface module

The interface module supports EtherCAT, EtherNet/IP and PROFINET.

*1: Please specify when placing your order.
*2: The set includes an end-effector Ethernet cable and camera stay. To use the camera, supply PoE to the hub.

third party products

Third-party products compatible with COBOTTA, such as image recognition devices, robot hands and feeders, are available in the market and many more products are expected to be introduced in the future. By combining devices that suit the type of work to be automated and the usage environment, the range of work that can be performed by COBOTTA can be expanded.

▶ QR code for the list of third-party products

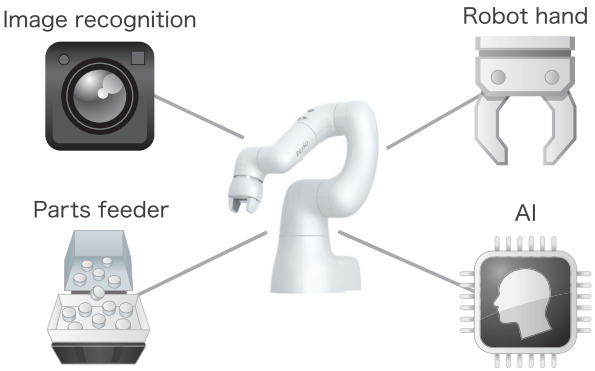

after service

DENSO offers a dedicated after-sales service menu for COBOTTA in order to ensure safe use of robots in places where people or objects get close to the robots. In addition to the standard warranty, a maintenance contract that covers the repair of a malfunction resulting from negligence is available.

▶ QR code for detailed information of the dedicated after-sales service menu for COBOTTA

- Notification of scheduled inspection
- Sendback repair service
- Substitute product rental service
- COBOTTA 24H call service*

*Optional

teaching & operating software

Easy start method



Cobotta World

Cobotta World is an application that runs on an Android tablet. Using this application, you can program the robot to perform a simple task such as picking and placing by simply moving items or operating the COBOTTA robot according to the guidance instruction.

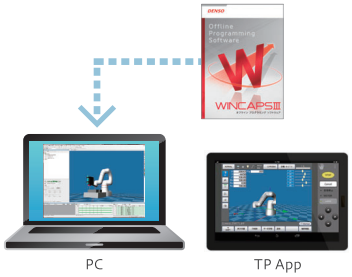

WINCAPS III & TP App*1

WINCAPS III is a programming application that runs on a Windows PC. It allows for easy editing and management of data of multiple units of COBOTTA. TP App is used to operate the COBOTTA robot or perform position teaching.

PC application to control the robot

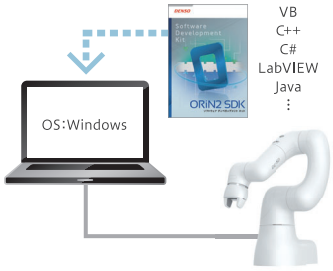

Windows OS

Use of ORiN2 SDK

By installing the middleware, ORiN2 SDK, in the PC, COBOTTA can be controlled with a development tool that supports OLE (COM, ActiveX), such as Visual Basic, C++ or LabVIEW.

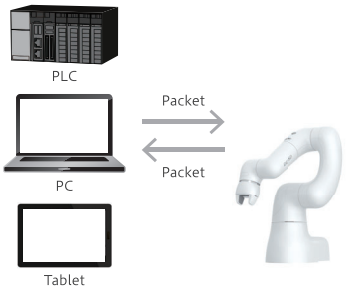

OS other than Windows OS

Use of b-CAP communication*2

When Linux, iOS or Android is used, COBOTTA can be controlled by transmitting and receiving b-CAP packets.

ROS

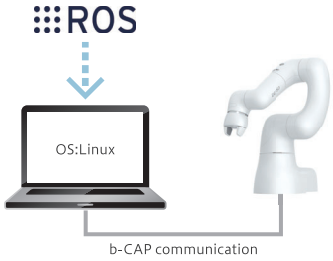

Use of an external PC installed with ROS

By installing an ROS package from GitHub to an external PC, COBOTTA can be controlled using b-CAP communication (transmission of b-CAP packets).

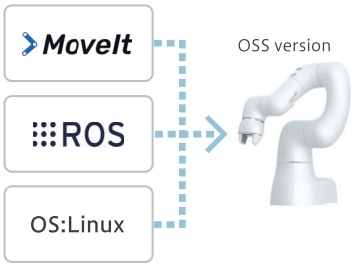

Using COBOTTA OSS version

COBOTTA OSS version enables the use of the COBOTTA unit as a PC. Simply install Linux and ROS in the COBOTTA unit for its control.

▶QR code for download of COBOTTA driver for Linux

PLC for the control

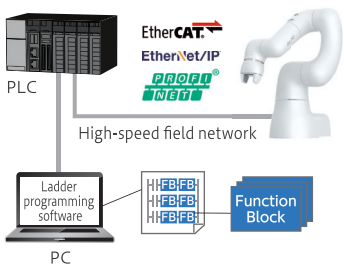

Use of Command Slave function

Connect the PLC to COBOTTA using a high-speed field network. COBOTTA can be controlled by the PLC language (ladder program).

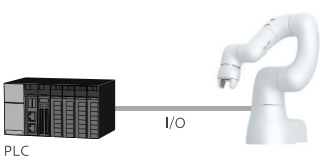

Directly controlling from PLC

Just like other DENSO robots, COBOTTA can be controlled directly by PLC inputs and outputs.

(*1) TP App comes in two types. Remote TP for Android tablet and Virtual TP for Windows PC.
(*2) b-CAP is a protocol which is created by following the concept of CAP, whose specifications are stipulated by ORiN, to improve communication speed.



safety design

Collaborative robots do not require safety fences. The unique outer contour has no sharp edges, and consists of curves that prevent hands from getting caught. Sensors are built into the six moving parts for constant monitoring of speed and torque ensuring user safety.

TÜVRheinland CERTIFIED
Type Approved
Safety
Regular Production Surveillance
www.tuv.com
ID 1419070582

Obtained safety certification based on four international standards from a third-party certification authority



easy to use

COBOTTA is equipped with a direct teaching function and an intuitive GUI for easy programming. An optional camera can be mounted to enable teaching using the camera.

portable body

The main unit weighs approximately 4 kg providing easy portability, and offers a load capacity of 500 g. The integrated controller not only reduces wiring, but also allows consolidated control with other devices. ORiN is supported as standard.



open platform

The integrated controller is open and COBOTTA's control API is made public, allowing creators to develop their own applications in the environment they choose (OSS version).



applications

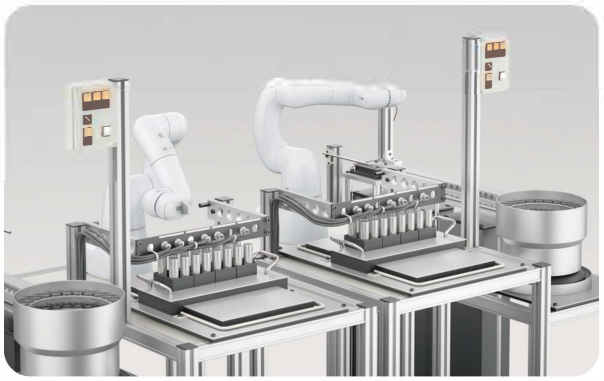

Industry | Placing and arranging parts in rows
(Courtesy of Toyota Motor Corporation)

COBOTTA recognizes the front and back side of parts fed from a parts feeder and positions them in the correct orientation. COBOTTA releases the worker from a process with a workload not enough for one worker.



Industry | Sorting parts, operating tablet, and inspecting substrate (Courtesy of Canon Inc.)

COBOTTA utilizes a camera and image processing software to automate simple and repetitive work that requires visual confirmation. COBOTTA can perform a multi-movement processing job in a limited space.

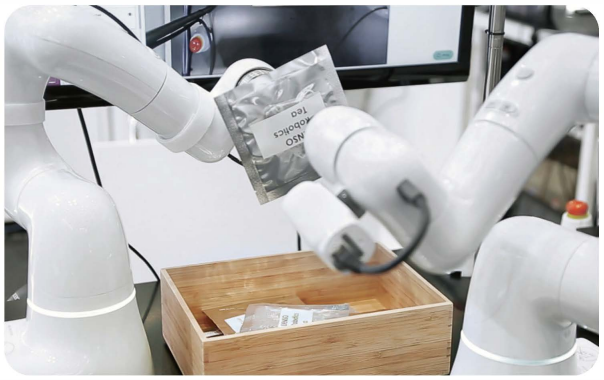

Industry | Packing teabags in a box using AI vision
(Courtesy of Innotech Corporation and OSARO Inc.)

COBOTTA can automate a process of picking transparent, lustrous or irregularly shaped items and image recognition by utilizing AI vision. COBOTTA can perform packing work in a limited space.



Laboratory | Chemical analysis

COBOTTA can automate a variety of work involved in chemical analysis, such as solution filtration, constant volume measurement, agitation and beaker washing. COBOTTA releases researchers from simple and unskilled work in a laboratory.



Academic | Serving as a programming learning tool

COBOTTA OSS version enables development activities in an ROS or LabVIEW environment, thus allowing for its use in education and training.

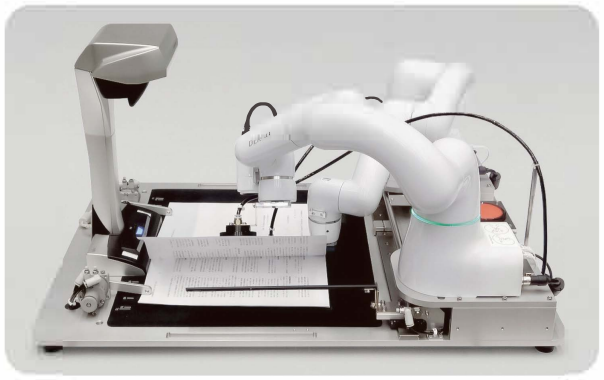

Office | RPA&COBOTTA® Office automation support
(Developed jointly with Mitsubishi HC Capital Inc. and Hitachi Systems, Ltd.)

RPA&COBOTTA® automates a series of tasks, such as placement of seal stamps and conversion of paper documents to digital data. It can combine with RPA tools to improve office efficiency and reduce workloads.

External dimensions and motion range (mm)

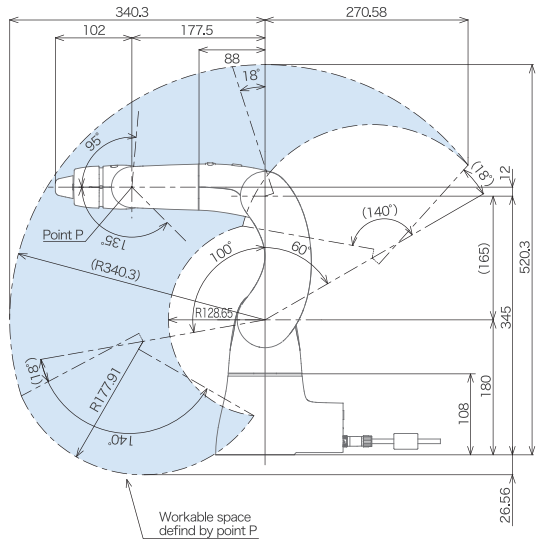

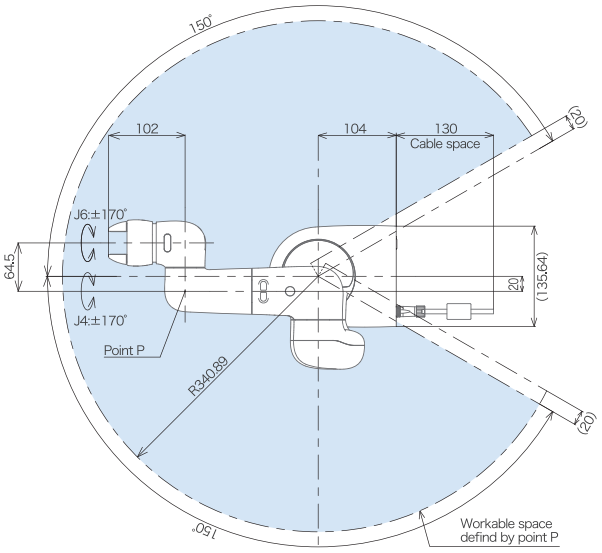

Tool mounting face

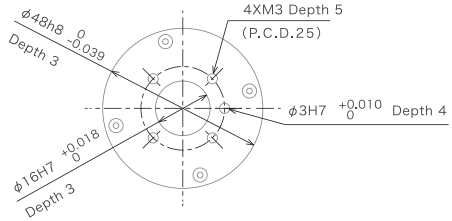

Base mounting face

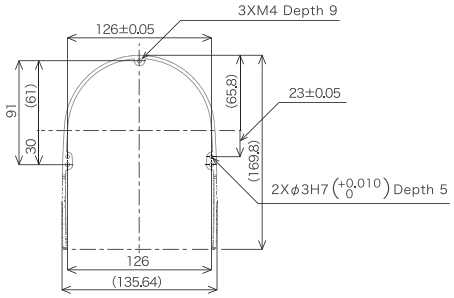

Without robot hand

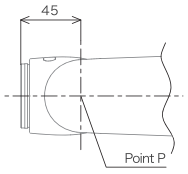

Specifications

Axes	6 axes (arm unit) + 1 axis (electric gripper unit)*1	
Brake	1, 2, 3, 4 and 5 axes with brake	
Arm length (No. 1 arm + No. 2 arm)	342.5(165+177.5)mm	
Rated payload (maximum payload)	0.5 kg (0.7 kg within ±10 degrees with the wrist angled downward)*2	
Maximum allowable moment of inertia	J4:0.0065kgm² J5:0.0047kgm² J6:0.0012kgm²	
Position repeatability	±0.05mm*3	
Standard cycle time	4.32 sec in the factory configuration, 1.6 sec when set to maximum speed (Reciprocating movement time for 200 mm in the horizontal direction and 25 mm in the vertical direction)	
Protection grade	COBOTTA unit: IP30 AC adapter and AC cable: IP20	
Software	Standard version: COBOTTA-dedicated software OSS version: None (* Linux, etc. may be installed by the customer)	
Power supply specification (AC adapter)	Input: Single-phase AC100 - 240 V ±10%/47 - 63 Hz	
External signal	Dedicated input: 12 points/Dedicated output: 11 points General-purpose input: 8 points/General-purpose output: 9 points External emergency stop connection x 1 ch	
External communication	Ethernet x 1 line, USB x 2 lines, VGA output x 1 ch	
Environmental condition (during operation)	Temperature: 0 to 40° C, Humidity: 20 to 80 %RH (with no condensation)	
Unit weight	Approx. 4 kg	
Safety specifications	Standard version	ISO 10218-1:2011 ISO/TS 15066:2016 ISO 13849-1:2015 PL d Cat.3
	OSS version	ISO 13849-1:2015 PL d Cat.3
Noise (equivalent continuous A-weighted sound pressure level)	55 dB or lower (Measured with the rated payload and the maximum speed at the factor default setting)	
Defacement (pollution) degree	2*4	
Over-voltage category	II*5	

*1. Option *2. Without electric gripper *3. Under constant temperature condition *4. "Pollution degree 2" is equivalent to the cleanliness in a home or office environment.
*5. "Overvoltage category II" refers to energy consuming equipment which receives electricity from a stationary facility (such as an AC power outlet).

This product is an industrial collaborative robot. Before using the product, be sure to conduct risk assessment in accordance with the applicable law, regulations, notices, guidance, JIS B 9700:2013, etc. and reduce risk as much as possible. The customer is responsible for confirming the compliance with the laws, regulations and standards applicable to the usage environment.

DENSO Products and Services Americas, Inc.
3900 Via Oro Avenue, Long Beach, California, 90810, U.S.A.
Phone : +1-888-476-2689 FAX : +1-310-952-7502

DENSO EUROPE B. V. DENSO Robotics Europe
Waldeckerstrasse 9 D-64546 Moerfelden-Walldorf, Germany
Phone : +49-6105-27-35-150 FAX : +49-6105-27-35-180

DENSO KOREA CORPORATION
131, Seonggogae-ro, Uiwang-si, Gyeonggi-do, Korea 437-120
Phone : +82-31-340-1783 FAX : +82-31-8033-7213

DENSO (CHINA) INVESTMENT CO., LTD.
No.35 Yuandian Road, Minhang District, Shanghai, CHINA 201108
Phone : +86-21-2350-0093 FAX : +86-21-2350-0179

DENSO TAIWAN CORP.
No.525 Sec.2, Mei Su Road, Jui Ping Li, Yang-Mei Town, Taoyuan Hsien, Taiwan
Phone : +886 3-482-8001 FAX : +886 3-482-8003

DENSO SALES(THAILAND) CO.,LTD.
888 Moo 1, Bangna-Trad Rd. Km 27.5, T.Bangbor, A.Bangbor, Samutprakarn, 10560, Thailand
Phone : +66-2-315-9500 FAX : +66-2-315-9556

* COBOTTA is a registered trademark of DENSO CORPORATION. Copyright© 2020 DENSO WAVE INCORPORATED All rights reserved.

P-CB6-E 202006